SPECIFICATIONS

AMALFI™ SINGLE HANDLE LAVATORY FAUCET

Model

D222530

Description

- Ceramic disc valve
- 9 3/4" high spout,3 1/2"spout legth,laminar flow
- Metal lever handle
- Includes 50/50 touch down drain DA505219P with color-matching flange and cap and black tailpiece
- Single hole mount with optional deck plate DA667229
- 1.2gpm (4.5L/min) maximum flow rate @60 psi
- Meets CEC Requirement

Flow Rate

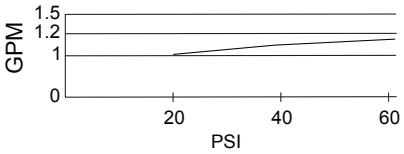

WaterSense Meets EPA Criteria
Certified by IAPMO R&T

Finishes Available

- Chrome
- Other: Refer to Price List for additional finish

Standards

UPC NSF/ANSI 372 • NSF/ANSI 372

MEETS ASME A112.18.1M/A112.18.1 • ASME A112.18.1M/A112.18.1

• ADA Accessibility Guidelines fo Buildings and Facilities - 309.4 Operation and Operable Parts

Warranty

Danze products are covered by a manufacturer's limited "lifetime" warranty for manufacturing defects.

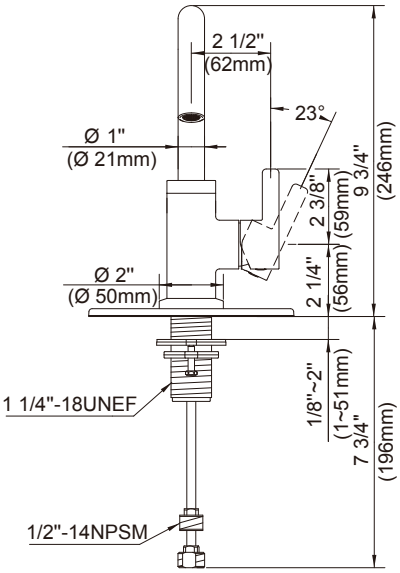

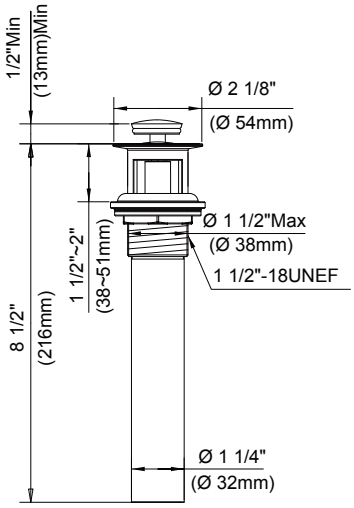

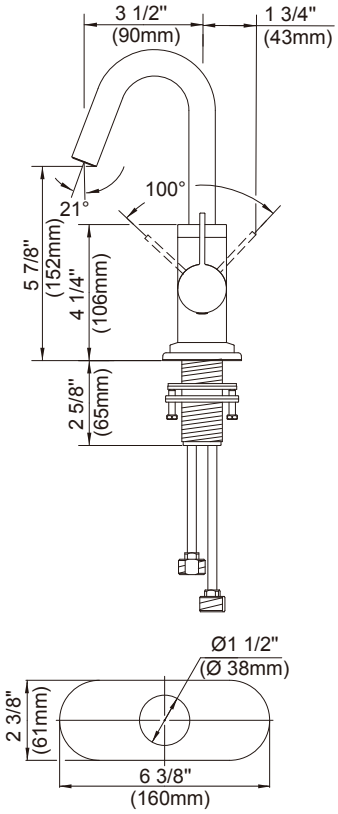

Submittal Information:

Job Name: _____ *Location:* _____

Contractor: _____ *Contact #:* _____