5331

Essence - 60” x 41 ½” x 24”
Swirl-way® Air Massage Bath

MANSFIELD®

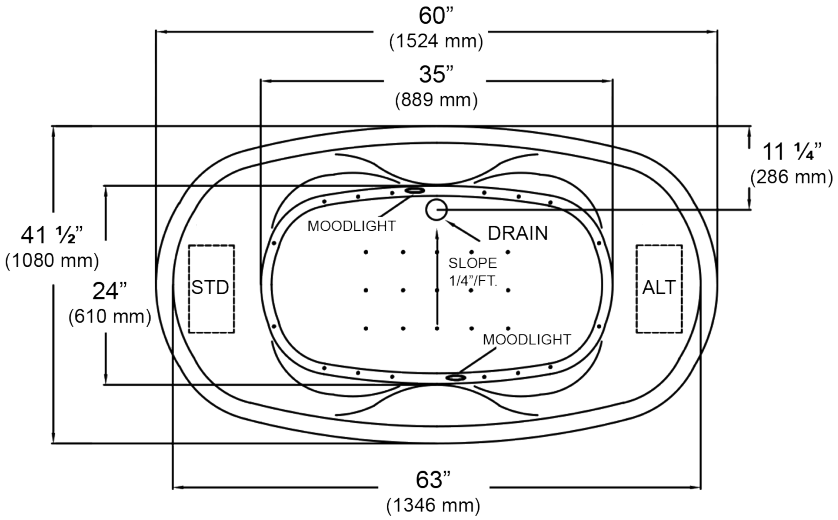

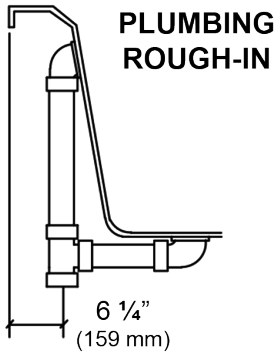

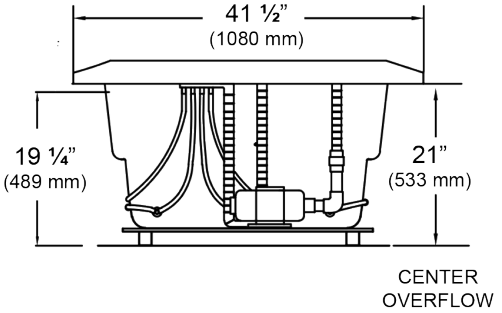

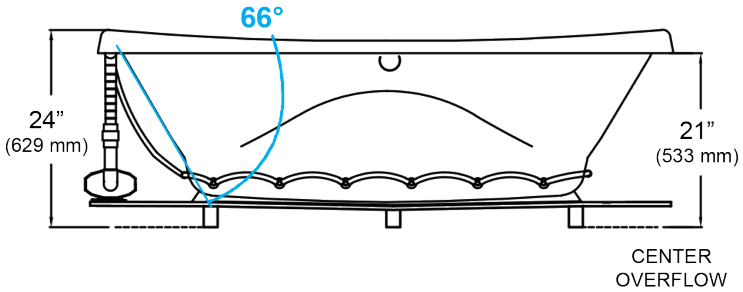

NOTES:
1. Blower locations shown for clarity. Specify when ordering STD - Standard or ALT - Alternate.
2. Required blower motor access is 20” W x 15” H.
3. Measurements may vary 1/4” (+/-)
4. Removable apron is not available for this unit.
5. These dimensions are nominal and subject to change without notice.

SPECIFICATIONS

Specification	Description	Specification	Description
Material	Acrylic, fiberglass reinforced	**Number of Jets**	30
Construction	Self-contained, pre-plumbed air bath system mounted on a pre-leveled base	**Water Capacity**	60 gal. (min) 75 gal. (max)
Blower Motor	1.0 HP Variable Speed - 120 V, 9.0 AMP	**Floor Loading Weight**	47 lbs. / sq. ft (229 kg/m^2)
Electrical Requirements	One 120V, 20 AMP, GFCI Protected Circuit	**Shipping Weight**	170 lbs.
On/Off Control	Six button electronic control 20 minute time cycle, and auto purge cycle	**Warranty**	Limited Ten Year

NRTL IAPMO EGS C US

UPC ®

USPC ®

MADE IN USA

Printed in U.S.A. 04/17
© Mansfield Plumbing Products, LLC

Mansfield Plumbing Products • Customer Service Toll Free: 877-850-3060 • Fax 419-938-6234
Website: www.mansfieldplumbing.com • E-mail: custsrvs@mansfieldplumbing.com