5340

Brighton™ 72” x 48” x 24” Swirl-way® Air Massage Bath

MANSFIELD®

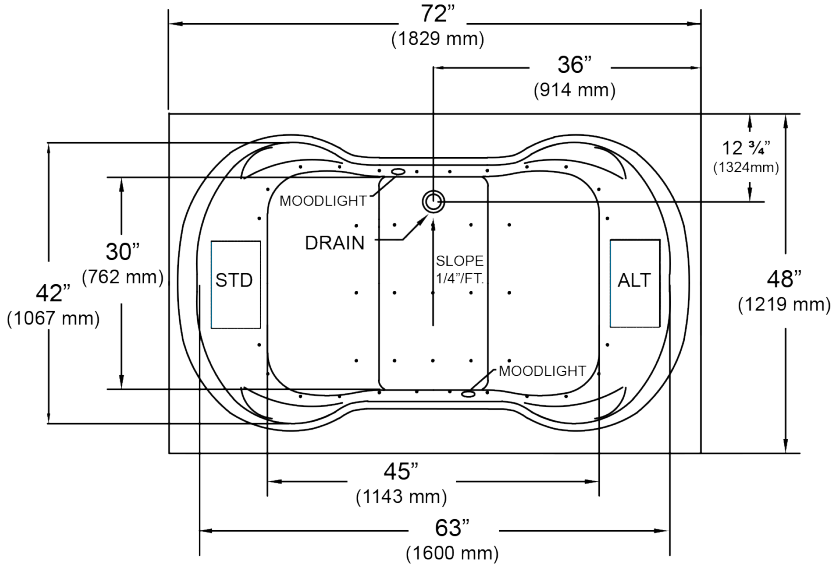

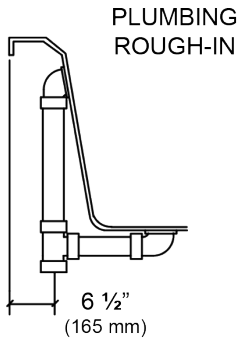

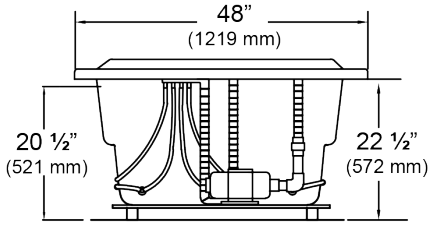

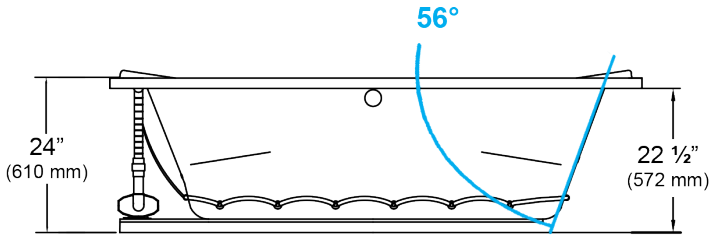

NOTES:
1. Blower locations shown for clarity. Specify when ordering STD - Standard or ALT - Alternate.
2. Required blower motor access is 20” W x 15” H.
3. Measurements may vary 1/4” (+/-)
4. If a factory installed nailing flange is added to a unit, add 1/8” to each side flanged.
5. Removable apron is not available for this unit.
6. These dimensions are nominal and subject to change without notice.

SPECIFICATIONS

Specification	Description	Specification	Description
Material	Acrylic, fiberglass reinforced	**Number of Jets**	34
Construction	Self-contained, pre-plumbed air bath system mounted on a pre-leveled base	**Water Capacity**	80 gal. (min) 95 gal. (max)
Blower Motor	1.0 HP Variable Speed - 120 V, 9.0 AMP	**Floor Loading Weight**	47 lbs. / sq. ft (229 kg/m^2)
Electrical Requirements	One 120V, 20 AMP, GFCI Protected Circuit	**Shipping Weight**	185 lbs.
On/Off Control	Six button electronic control 20 minute time cycle, and auto purge cycle	**Warranty**	Limited Ten Year

NRTL IAPMO EGS C US

UPC ®

USPC ®

MADE IN USA

Printed in U.S.A. 04/17
© Mansfield Plumbing Products, LLC

Mansfield Plumbing Products • Customer Service Toll Free: 877-850-3060 • Fax 419-938-6234
Website: www.mansfieldplumbing.com • E-mail: custsrvs@mansfieldplumbing.com